hansgrohe

Locarno
Towel Ring
Finish: **brushed gold optic** Part no. : **04836250**

Description

Features

- Wall-mounted
- Metal
- Swiveling
- Concealed fastening

Item details

List Price	$ 195.00

Compliance / Sustainability

MAP

Product image
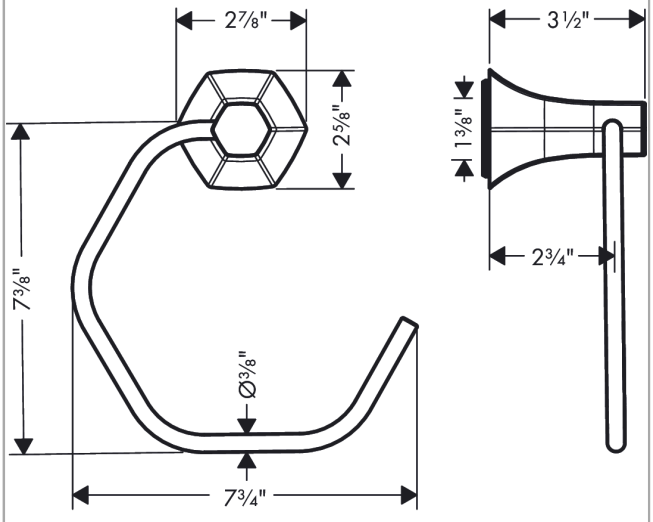
Scale drawing